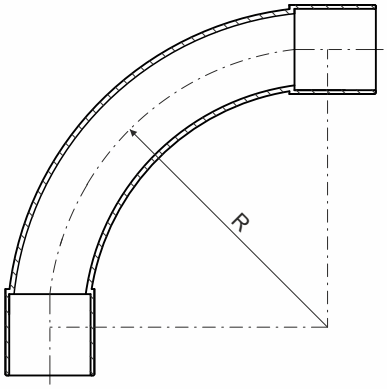

product description:

elbows with sockets on both sides designed for 90° bend
bending radius ensures smooth transition and allows easy retraction of wires and cables
for different angle than 90° is possible to use a flexible pipe and coupling
elbow can be used for joining rigid and flexible pipes
possibility to install in places with risk of flammable gases and vapor zone 2
possibility to install in places with explosive risk of flammable dusts zone 22

material: PVC
color: white RAL 9003, light gray RAL 7035, dark gray RAL 7012, black RAL 9005
self-snuffing: yes, within 30 s
temperature resistance: -25 - +60 °C
fire class for underlying material: A1-F
UV stable: no
mechanical protection according to EN 50102: IK09
certification: EN 61386-1 ed.2:09, EN 50102
storage: ČSN 64 0090

chemical resistance:

YES: amoniak 25%, destilled water, ethanol 50%, sodium hydroxide 60%, hydrofluoric acid 40%, acetic acid 5%, sulfuric acid 96%, medicinal oil, methanol, olive oil, petroleum, hydrogen peroxide 20%, transformer oil, sodium carbonate
NO: aceton, benzen, phenol solution 5%, chlorinated hydrocarbons, tetrachlorocarbon

Официальный дистрибьютор
ООО "Компания АйСиэС"

Москва +7 495 720-49-00 www.icsgroup.ru
Санкт-Петербург +7 812 385-14-64 www.icsbaltica.ru

item number	dn pipe (mm)	R	weight (g/pc)	package (pcs)	colour	for pipes
4116_FB	16	55	12	10 / 480	black RAL 9005	2316E
4116_HB	16	55	12	10 / 480	white RAL 9003	1416E 1216E
4116_KB	16	55	12	10 / 480	light grey RAL 7035	1516E
4116_LB	16	55	12	10 / 480	dark grey RAL 7012	4016E 8016E
4120_FB	20	70	21	10 / 240	black RAL 9005	2320
4120_HB	20	70	21	10 / 240	white RAL 9003	1420 1220
4120_KB	20	70	21	10 / 240	light grey RAL 7035	1520
4120_LB	20	70	21	10 / 240	dark grey RAL 7012	4020 8020
4125_FB	25	85	34	10 / 120	black RAL 9005	2325
4125_HB	25	85	34	10 / 120	white RAL 9003	1425 1225
4125_KB	25	85	34	10 / 120	light grey RAL 7035	1525
4125_LB	25	85	34	10 / 120	dark grey RAL 7012	4025 8025
4132_FB	32	110	74	10 / 60	black RAL 9005	2325
4132_HB	32	110	74	10 / 60	white RAL 9003	1432 1232
4132_KB	32	110	74	10 / 60	light grey RAL 7035	1532
4132_LB	32	110	74	10 / 60	dark grey RAL 7012	4032 8032
4140_FB	40	135	104	5 / 35	black RAL 9005	2340
4140_HB	40	135	104	5 / 35	white RAL 9003	1440 1240
4140_KB	40	135	104	5 / 35	light grey RAL 7035	1540
4140_LB	40	135	104	5 / 35	dark grey RAL 7012	4040 8040
4150_FB	50	170	199	5 / 30	black RAL 9005	2350
4150_HB	50	170	199	5 / 30	white RAL 9003	1450 1250
4150_KB	50	170	199	5 / 30	light grey RAL 7035	1550
4150_LB	50	170	199	5 / 30	dark grey RAL 7012	4050 8050

Официальный дистрибьютор
ООО "Компания АйСиэС"
Москва +7 495 720-49-00 www.icsgroup.ru
Санкт-Петербург +7 812 385-14-64 www.icsbaltica.ru