KOPOS
www.kopos.com

item number	for width of cable tray	for height of cable tray	A	thickness of metal sheet	weight kg/ps	amount of bolts for connection
NKO 90X50X62_S	62	50	241	0,7	0,34	4
NKO 90X50X62_F					0,40	
NKO 90X50X125_S	125	50	241	0,7	0,42	4
NKO 90X50X125_F					0,50	
NKO 90X50X250_S	250	50	241	0,7	0,59	4
NKO 90X50X250_F					0,75	
NKO 90X100X125_S	125	100	291	0,7	0,66	8
NKO 90X100X125_F					0,78	
NKO 90X100X250_S	250	100	291	0,7	0,83	8
NKO 90X100X250_F					1,03	
NKO 90X100X500_S	500	100	291	0,7	1,17	8
NKO 90X100X500_F					1,49	

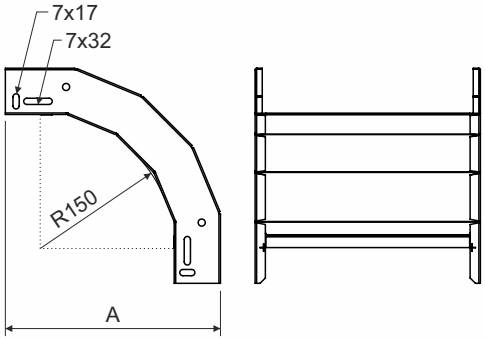

product description: The low elbow is designed for the transition between a horizontal and sloping (vertical) cable tray.

To fix the connection use the bolt NSM 6X10. To protect the cables, the bolt head is inside the cable tray.

A bolt with a GMT surface finish is used for a tray with an F surface finish.

These items can also be ordered in a varnished version.

surface finish: S - Pre-Galvanized, zinc-layer 15 - 27 µm
F - Hot Dip Galvanized, zinc-layer 45 µm (min. 35 µm)

sales amount: á 1 pc

certification: EN 61537:02

storage: EN 60721-3-1

Официальный дистрибьютор
ООО "Компания АйСиэС"

Москва +7 495 720-49-00 www.icsgroup.ru
Санкт-Петербург +7 812 385-14-64 www.icsbaltica.ru