item number	for width of cable tray	for height of cable tray	A	thickness of metal sheet	weight kg/ps	amount of bolts for connection
NSO 90X50X62_S	62	50	241	0,7	0,37	4
NSO 90X50X62_F					0,44	
NSO 90X50X125_S	125	50	241	0,7	0,48	4
NSO 90X50X125_F					0,57	
NSO 90X50X250_S	250	50	241	0,7	0,71	4
NSO 90X50X250_F					0,91	
NSO 90X100X125_S	125	100	291	0,7	0,79	8
NSO 90X100X125_F					0,93	
NSO 90X100X250_S	250	100	291	0,7	1,06	8
NSO 90X100X250_F					1,35	
NSO 90X100X500_S	500	100	291	0,7	1,62	8
NSO 90X100X500_F					2,10	

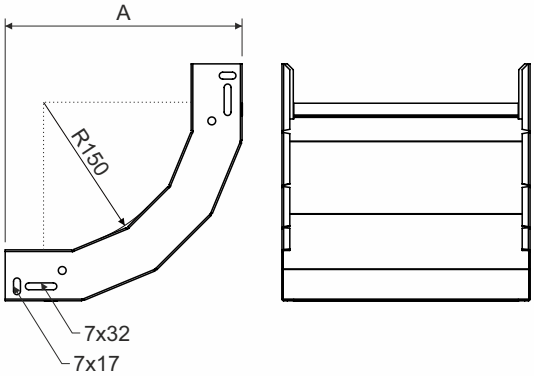

product description: The rising elbow is designed for the transition between a horizontal and sloping (vertical) cable tray.

To fix the connection use the bolt NSM 6X10. To protect the cables, the bolt head is inside the cable tray.

A bolt with a GMT surface finish is used for a tray with an F surface finish.

These items can also be ordered in a varnished version.

surface finish: S - Pre-Galvanized, zinc-layer 15 - 27 µm
F - Hot Dip Galvanized, zinc-layer 45 µm (min. 35 µm)

sales amount: á 1 pc

certification: EN 61537:02

storage: EN 60721-3-1