DATA SHEET

ceiling profile - medium

www.kopos.com

item number	length L mm	w eight kg/pc
SPSN 200_F	205	0,93
SPSN 250_F	255	1,05
SPSN 300_F	305	1,17
SPSN 400_F	405	1,42
SPSN 500_F	505	1,60
SPLN 600_F	605	1,90
SPSN 700_F	705	2,15
SPSN 800_F	805	2,39
SPSN 900_F	905	2,63
SPSN 1000_F	1005	2,87
SPSN 1100_F	1105	3,12
SPSN 1200_F	1205	3,36
SPSN 1500_F	1505	4,09
SPSN 2000_F	2005	5,30

product description: The ceiling profile is used as an element to create a supporting structure for a cable tray and to attach it to the ceiling or floor.

Designated for one sided fastening of the brackets DLN, DSN, DS, DT and DTN with the use of the bolt with a hexagonal head S 10X20, nut M 10 and washer PD 10. For double sided fastening of the bracket is used reinforcement piece VSPSN and bolt S 10X80.

For safety purposes, the bracket are fasted min. 5 cm from the end of the profile and the end of the profile may be fitted with an OKSPSN protective cover.

surface finish: F - Hot Dip Galvanized according to EN ISO 1461, zinc-layer 55 µm (min. 45 µm)

sales amount: á 1 pc

storage: EN 60721-3-1

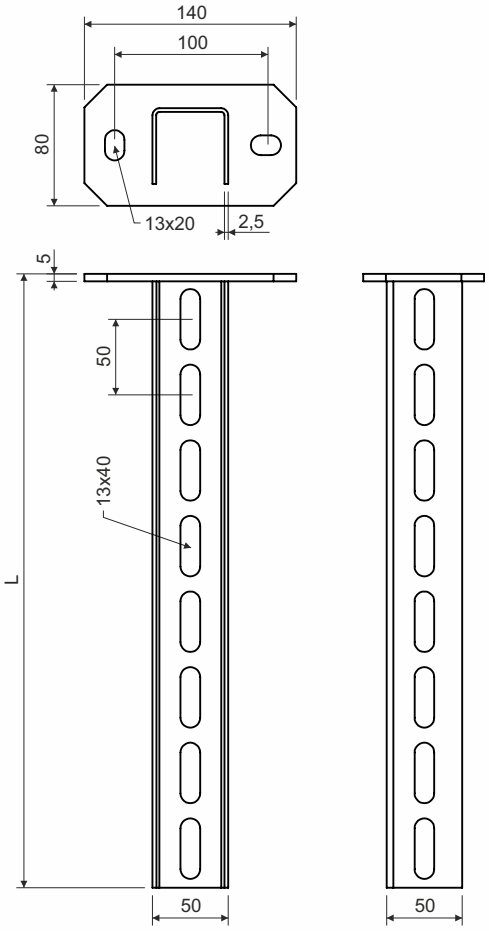

Официальный дистрибьютор
ООО "Компания АйСиэС"

Москва +7 495 720-49-00 www.icsgroup.ru
Санкт-Петербург +7 812 385-14-64 www.icsbaltica.ru